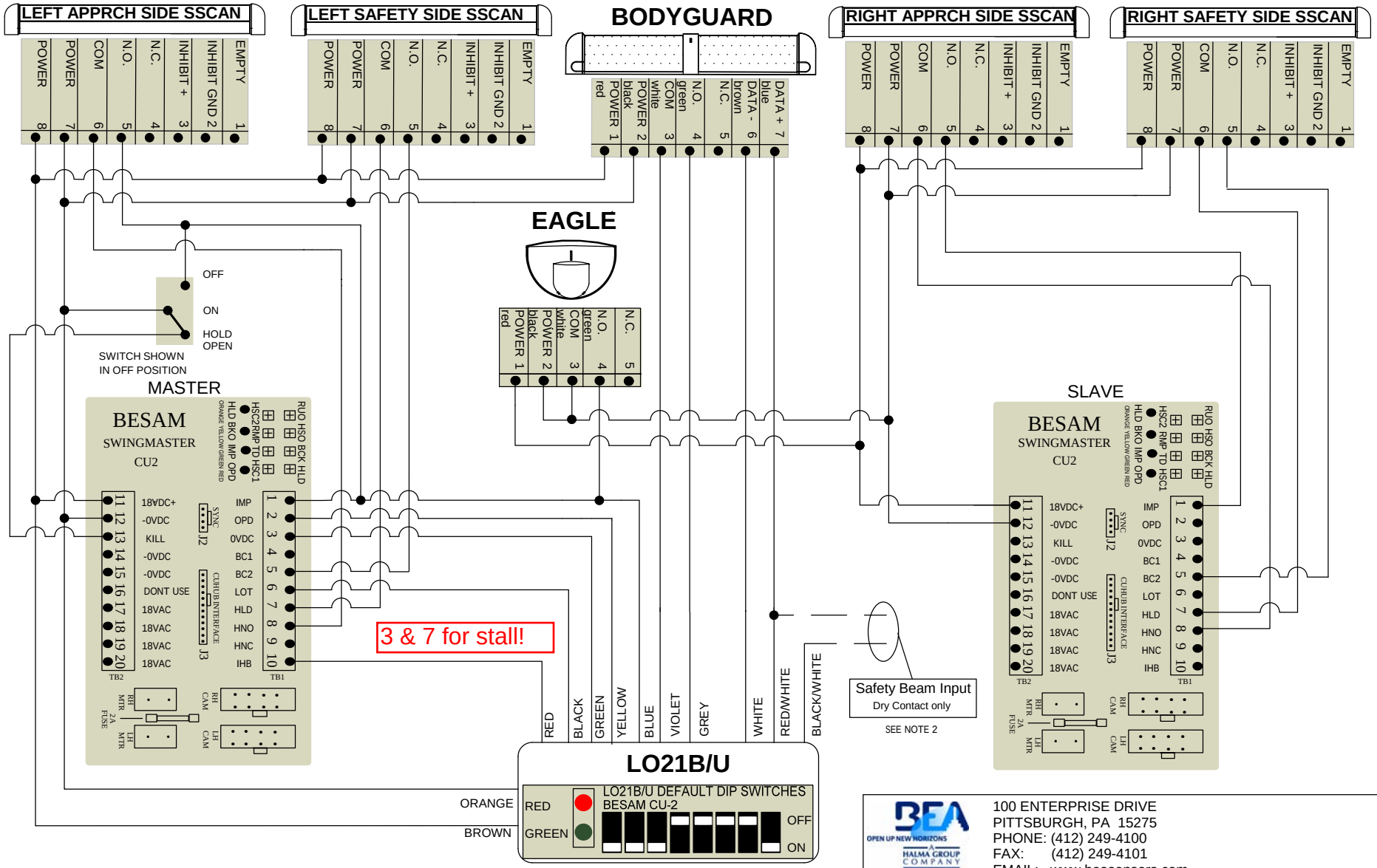

NOTES:

1. FOR SIMULTANIOUS PAIR ENSURE THAT THE SYNC CABLE IS CONNECTED BETWEEN THE MASTER AND SLAVE
2. CAP OFF BLACK/ WHITE WIRE IF NOT USED.

IF AFTER TROUBLESHOOTING A PROBLEM, A SATISFACTORY SOLUTION CANNOT BE ACHIEVED, PLEASE CALL B.E.A., INC. FOR FURTHER ASSISTANCE DURING EASTERN STANDARD TIME AT 1-800-523-2462 FROM 8AM - 5PM. FOR AFTER-HOURS, CALL EAST COAST: 1-866-249-7937 OR1-866-836-1863/ MID-WEST: 1-800-407-4545 OR 1-888-308-8843 / WEST COAST: 1-888-419-2564. DO NOT LEAVE ANY PROBLEM UNRESOLVED. IF YOU MUST WAIT FOR THE FOLLOWING WORKDAY TO CALL B.E.A., LEAVE THE DOOR INOPERABLE UNTIL SATISFACTORY REPAIRS CAN BE MADE. NEVER SACRIFICE THE SAFE OPERATION OF THE AUTOMATIC DOOR OR GATE FOR AN INCOMPLETE SOLUTION.WEB: WWW.BEASENSORS.COM

BEA
OPEN UP NEW HORIZONS
A HALMA GROUP COMPANY

100 ENTERPRISE DRIVE
PITTSBURGH, PA 15275
PHONE: (412) 249-4100
FAX: (412) 249-4101
EMAIL: www.beasensors.com

TITLE: BESAM CU-2 W/ PARALLAX 2 LO21B/U

SIZE:	DRAWN BY:	REV BY:	PART NO:
A	WJR	WJR	80.0296.01
	SCALE: NONE	DATE: 12 AUG 09	SHEET 1 OF 1